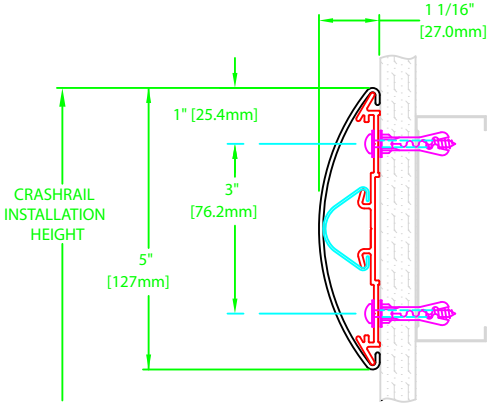
1 1/16"
[27.0mm]
1" [25.4mm]
3"
[76.2mm]
CRASHRAIL
INSTALLATION
HEIGHT
5"
[127mm]

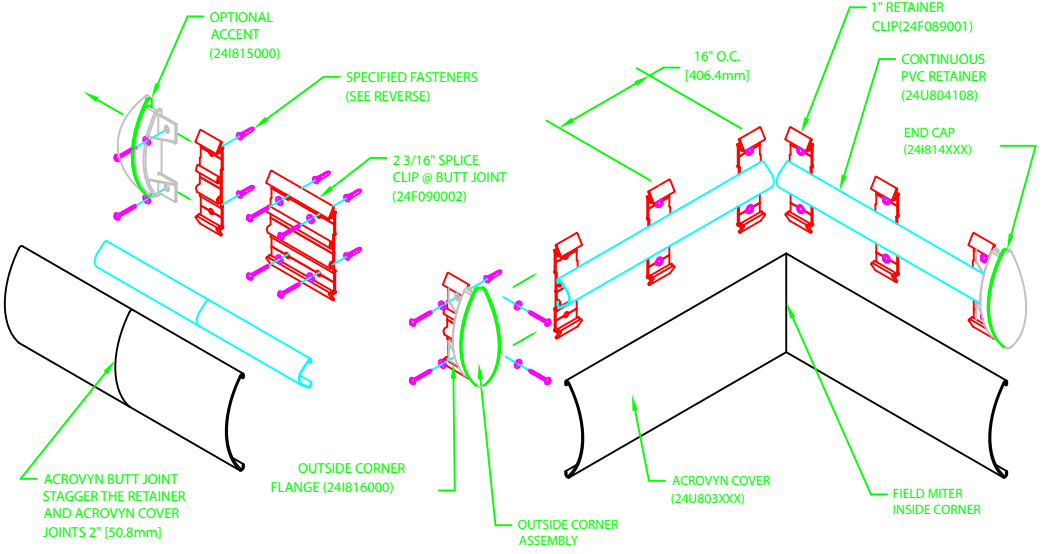
OPTIONAL
ACCENT
(24I815000)
SPECIFIED FASTENERS
(SEE REVERSE)
2 3/16" SPLICE
CLIP @ BUTT JOINT
(24F090002)
ACROVYN BUTT JOINT
STAGGER THE RETAINER
AND ACROVYN COVER
JOINTS 2" [50.8mm]
OUTSIDE CORNER
FLANGE (24I816000)
OUTSIDE CORNER
ASSEMBLY
16" O.C.
[406.4mm]
1" RETAINER
CLIP(24F089001)
CONTINUOUS
PVC RETAINER
(24U804108)
END CAP
(24I814XXX)
ACROVYN COVER
(24U803XXX)
FIELD MITER
INSIDE CORNER